Jillian Ryan

Mechanical Engineering Portfolio

About Me

Hi! I’m a **senior mechanical engineering major** and **music minor** at **Northeastern University**, born and raised in Boston.

My professional experience includes **R&D at Miele’s Emerging Technologies Lab** and **Product Design Engineering at SharkNinja** on the Vacuums Advanced Development team.

Outside of engineering, you will find me trying new restaurants, sewing and upcycling, and playing electric bass. Thanks for stopping by!



Table of Contents

4. Generate Product Development - Cicada Health
5. Capstone - Engineered Heart Tissue Biaxial Stretching System
6. Generate Product Development - Growver
7. Generate Product Development - GreenTower
8. iGEM - FloraGuard
9. Professional Experience
10. Contact

Cicada Health **July 2026 - Present**

Cicada Health is a **custom-fit intraoral biosensor wearable**, developed for a **Harvard biotech startup** through **Generate**, Northeastern's Product Development Studio. The device features a custom fit retainer, swappable sensor cartridge, charging/cleaning case, and an app.

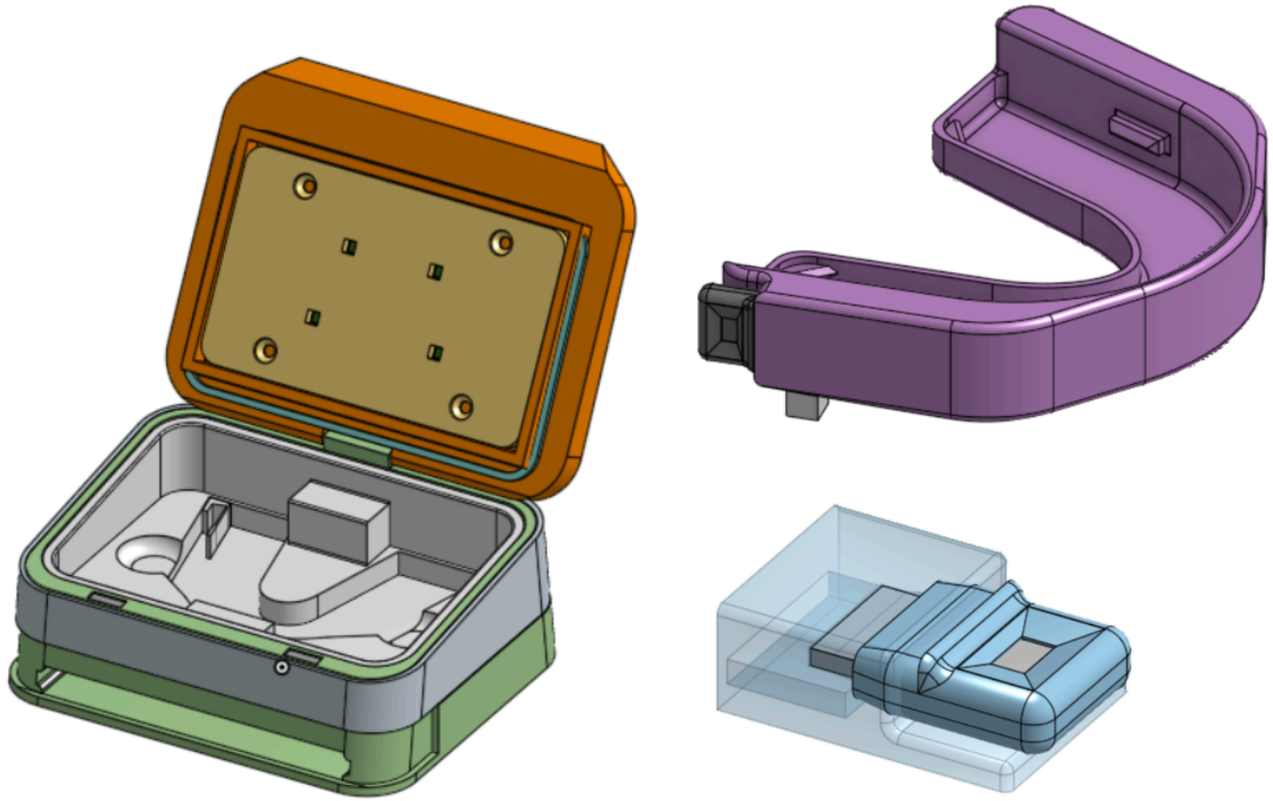

My Role

As **Project Lead**, I led a **12-person, cross-disciplinary** team, setting the technical scope by weighing client requirements against what we could actually build. I owned the **project timeline** and guided teammates' technical and professional development.

I ran **design reviews** with client, alumni, and industry engineers, and coordinated integration of six PCBs, including flex and HDI boards. I also managed a $2,750 budget and secured a $1,000 grant from SendCutSend.

Materials

SLA, SLS, FDM, silicone, sealants, epoxy, 6061 aluminum

Processes

Rapid prototyping, tolerance analysis, DFM, DFA, electronic integration, BOM management

Software

Onshape, KeyShot, Adobe, Notion, and Google Sheets

Engineered Heart Tissue Biaxial Stretching System

July 2026 - Present

This **two-semester capstone** is a biaxial stretching system that **applies strain to engineered heart tissue** (EHT). The system will stretch a row of tissue samples and must hold up under **37°C and 100% humidity**.

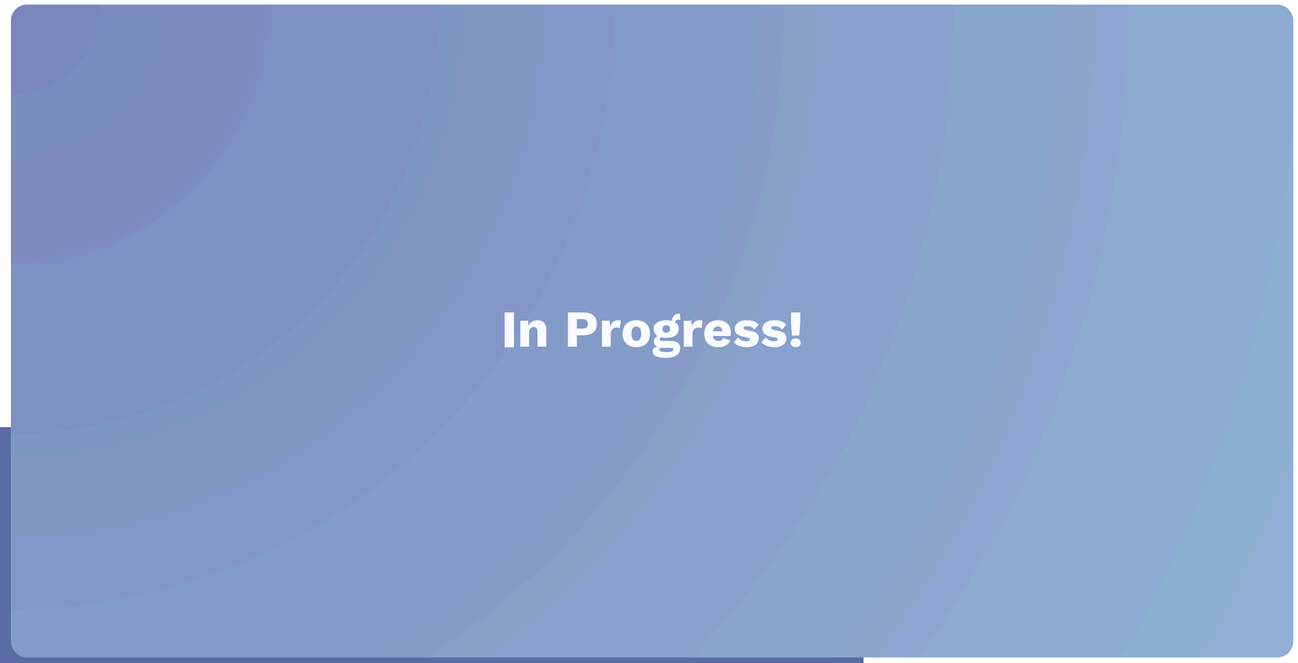

My Role

Our **team of six** has completed the first semester of this project, including **research and concept development**.

The current plan is a **motor-driven linear actuator**, with stretching-post geometries changed for efficient actuation. Testing will cover the motor, post configurations, and failure under temperature and humidity.

Materials

SLA, stainless steel, PDMS/silicone

Processes

Rapid prototyping, research, concept development, test planning

Growver January - April 2026

Growver is an **automatic tree-planting robot** designed to make reforestation faster and less labor-intensive. This project was for a client through **Generate** and was presented at the end-of-semester showcase. It integrates five mechanical and four electrical subsystems.



My Role

As the team of fifteen's **only product design engineer**, I designed and fabricated the **acrylic enclosure**, led subsystem layout and **UI/UX features**, and oversaw **chassis design**. I also oversaw firmware integration, ran FEA in SolidWorks, and created KeyShot animations of subassemblies for walkthroughs.

Materials

FDM, acrylic

Processes

Enclosure design, water jetting, master sketching/modeling, sheet-part modeling, FEA, rendering and animation

Software

Onshape, Keyshot, Adobe Illustrator

GreenTower **September - December 2025**

GreenTower is an **automated modular hydroponic growing system** with stackable growing modules, automated nutrient delivery and fluidic systems, and adjustable lighting. This product was designed for a client through **Generate** and was presented at the end-of-semester showcase.





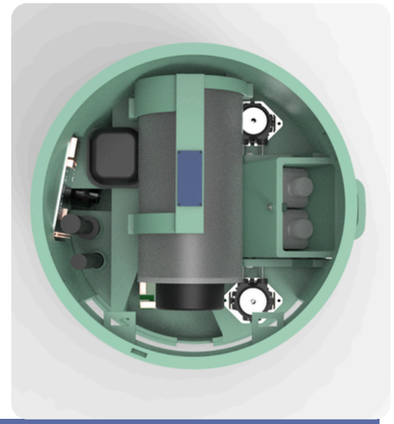

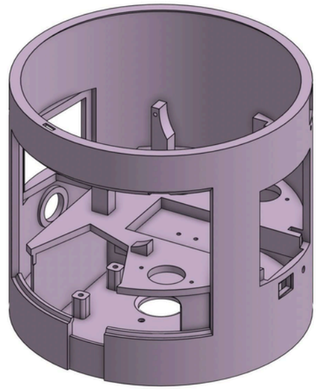

My Role

As the team of thirteen's **only product design engineer**, I led the overall **form factor design**, prototyped the **base enclosure**, coordinated **touchpoints and firmware**. I also designed the leaf-shaped LED hollders to strengthen GreenTower's design language while directing and shielding the light.

I also led UI/UX, oversaw four mechanical subsystems, and performed tolerance analysis for the base module. I produced KeyShot renders of subassemblies for walkthroughs.

Processes

Enclosure design, rapid prototyping (FDM), tolerance analysis, DFM/DFA, rendering and animation

Software

Onshape, Keyshot, Adobe Illustrator

FloraGuard January - December 2025

FloraGuard is a **bioengineered flame-retardant protein** for wildfire prevention, developed by Northeastern's iGEM team. iGEM is the **world's largest synthetic biology competition**. The Hardware sub team developed a **coil wire furnace** to validate the protein's resistance to heat.

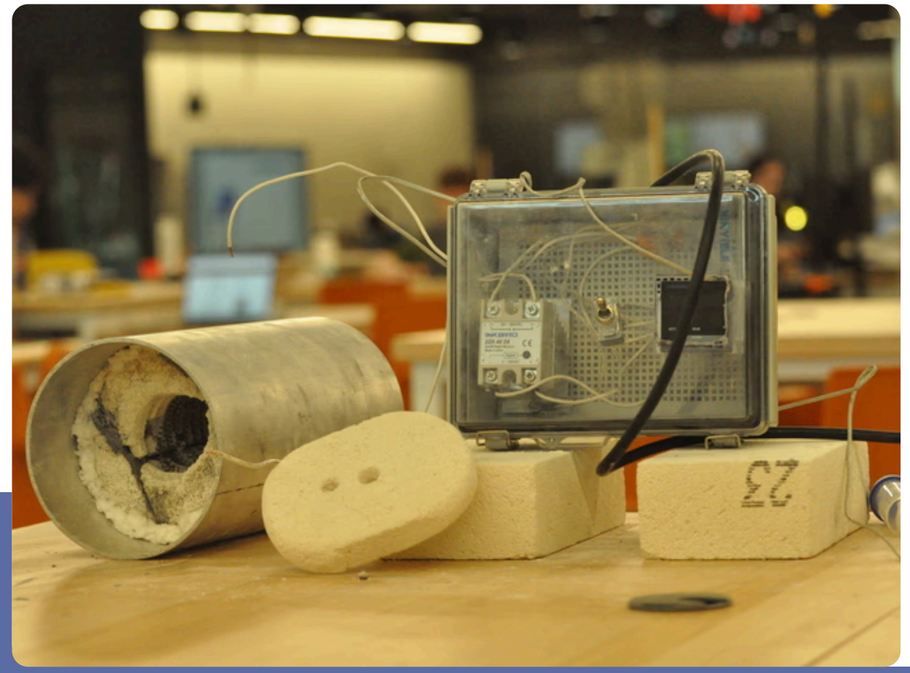



My Role

As **one of three hardware engineers**, I designed and fabricated the heating chamber to validate the protein, integrated its control system, and wrote the testing SOPs.

The result was a safe, repeatable test rig that proved the protein's effectiveness and helped us win **Best Conservation Project** (best undergraduate project in our category) and a Silver Medal at the **Grand Jamboree in Paris**.

Materials

Thermocouple and PID control circuit components, aluminum shell, fire brick, Kanthal wire, fabric insulation

Processes

PID control, thermocouple integration, circuit wiring, SOP and safety protocol development, carving, drilling, bonding

Software

Fusion 360, Onshape, MATLAB

Professional Experience

Product Design Engineer Co-op - Advanced Development
SharkNinja - Needham, MA
July 2026 - Present

R&D Mechanical Engineer Co-op
Miele Emerging Technologies Lab - Peabody, MA
January 2025 - June 2025

Engineering Lab Leader
Digital Ready - Boston, MA
June 2024 - August 2024

Contact

Phone :

617-794-5554

LinkedIn :

linkedin.com/jillianryann

Email:

jillianryann19@gmail.com